SPECTRUM COMMUNICATIONS

1055 W. GERMANTOWN PK.
NORRISTOWN, PA. 19401
215 - 631 - 1710

TIMER RESET ANNUNCIATOR
SCHEMATIC

TRA-1

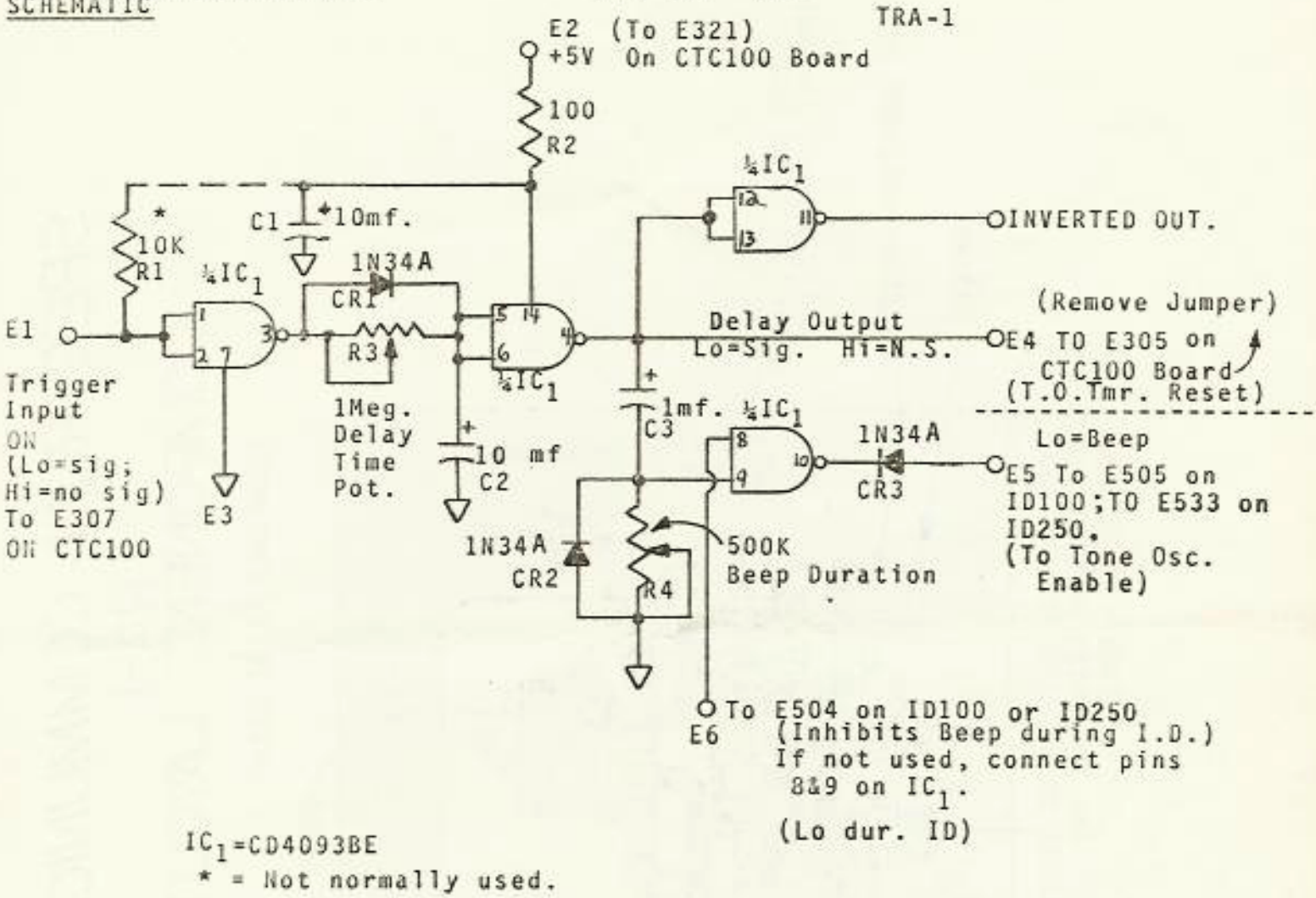

IC_1=CD4093BE

* = Not normally used.